MODEL 40-504

SPECIFICATIONS

Model 40-504 is a portable battery operated combination phonograph and radio. The radio consists of a four tube superheterodyne circuit covering a frequency range from 540 to 1600 K. C. A loop aerial is also built into the cabinet for portable use in addition to connections for an external aerial and ground for permanent and semi-permanent use.

The phonograph plays 10 and 12 inch records and consists of a crystal pick-up and a mechanically operated turntable motor (handwind).

INTERMEDIATE FREQUENCY: 470 K. C.
BATTERIES REQUIRED: "A" Philco Type P-94, "B" Philco Type P-305
BATTERY DRAIN: "A" 210 M. A.; "B" 8.5 M. A.
ALIGNING PROCEDURE: The equipment required and method of connecting the aligning instruments is the same as that given for Model 40-81 on page 40. With this equipment connected to the radio, adjust the padders as given in the following tabulation:

Operations in Order	SIGNAL GENERATOR			RECEIVER			SPECIAL INSTRUCTIONS
	Output Connections to Receiver	Dummy Antenna (Note A)	Dial Setting	Dial Setting	Control Setting	Adjust Compensators in Order	
1	1A7G Grid	.1 mfd.	470 K. C.	580 K. C.	Vol. Cont. Max.	12A, 11B, 11A	Note C
2	Ant. & Grd. Terminals	400 ohms	1550 K. C.	1550 K. C.	Vol. Cont. Max.	2B, 2A	Note B Note C

NOTE A—The "Dummy Antenna" consists of a condenser or resistor connected in series with the signal generator output lead (high side). Use the capacity or resistance as specified in each step of the above procedure.

NOTE B—DIAL CALIBRATION: In order to adjust the receiver correctly, the dial must be aligned to track properly with the tuning condenser. To adjust the dial proceed as follows: Turn the tuning condenser to maximum capacity (plates fully meshed). With tuning condenser in this position set the pointer to the small "black dot" at the low frequency end of the dial scale.

NOTE C—To adjust the I. F. compensators, remove the back from the cabinet, which is held in place by four screws. The chassis is then taken out by removing the four screws and two corks underneath the cabinet, and the Tuning and Volume knobs. The I. F. compensators are located on top of the I. F. transformers.

When adjusting the Antenna (2A) and Oscillator (2B) compensators, the chassis must be assembled in the cabinet with the batteries and loop in place. The Signal Generator output lead with the "Dummy Antenna" is then connected to the terminals marked "Ant" and "Grd" underneath the cabinet. The antenna and oscillator compensators are then adjusted through the holes in the bottom of the cabinet.

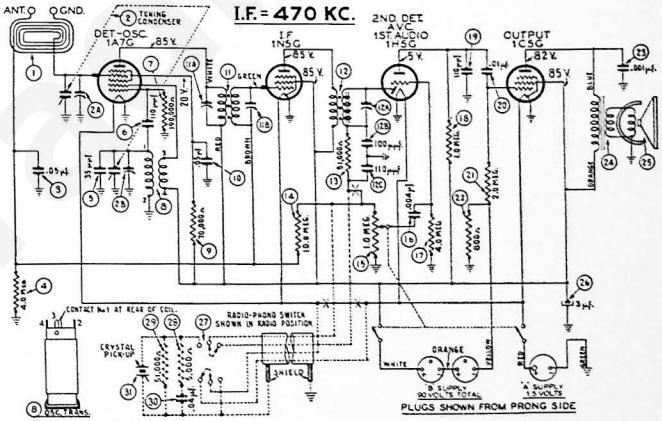

REPLACEMENT PARTS

SCHE. No.	DESCRIPTION	PART No.
1	Loop Assembly	40-6421
2	Tuning Condenser	31-2322
3	Tubular Cond. (.05 mfd.)	30-4519
4	Resistor (4.0 meg., ½ watt)	33-540339
5	Mica Cond. (35 mmfd.) mounted at top of tuning condenser	30-1095
6	Mica Cond. (110 mmfd.)	30-1031
7	Resistor (190,000 ohms, ½ watt)	33-419339
8	Oscillator Trans.	32-3118
9	Resistor (70,000 ohms, ½ watt)	33-370339
10	Tubular Cond. (.05 mfd.)	30-4444
11	1st I. F. Trans. Assy.	32-3103
12	2nd I. F. Trans. Assy.	32-3176
12C	Mica Cond. (110 mmfd.)	30-1031
13	Resistor (51,000 ohms, ½ watt)	33-351339
14	Resistor (10.0 meg., ½ watt)	33-610339
15	Volume Control (1.0 meg.)	33-5310
16	Tubular Cond. (.004 mfd.)	30-4578
17	Resistor (4.0 meg., ½ watt)	33-540339
18	Resistor (1.0 meg., ½ watt)	33-510339
19	Mica Cond. (110 mmfd.)	30-1031
20	Tubular Cond. (.01 mfd.)	30-4572
21	Resistor (2.0 meg., ½ watt)	33-520339
22	Resistor (800 ohms, ½ watt)	33-180339
23	Tubular Cond. (.001 mfd.)	30-4201
24	Output Trans. (Spkr. No. 36-1451-3)	32-8036
25	Cone & Voice Coil Assy. (Spkr. No. 36-1451-3)	36-4090
26	Electrolytic Cond. (3 mf., 150 V.)	30-2359
27	Radio-Phono Switch	42-1501
28	Resistor (5000 ohms, ½ watt)	33-250339
29	Resistor (51,000 ohms, ½ watt)	33-351339
30	Tubular Cond. (.04 mfd.)	30-4119
31	Crystal Pick-up (less tone arm)	35-2033
	Pick-up and tone arm complete	35-2036
	Tone arm (less pick-up)	35-2037

MISCELLANEOUS PARTS

Description	*Part No.*
Bezel Window	27-5434
Cabinet	10382-A
Crank Handle	35-2039
Dial	31-2321
Drive Cord Assy.	31-2394
Escutcheon (knobs)	56-1252
Grille Screen	56-1420
Knobs (Volume and Tuning)	27-4331
Knob (Radio-Phono Switch)	27-4332
Motor (less turntable)	35-1162
Needle Screw	218-1047
Pointer (dial)	28-5185
Pulley (Tuning Cond.)	28-6662
Pulley (idler, drive cord)	28-5986
Rubber Coupler (turntable shaft)	35-2040
Screw (escutcheon mtg.)	W-2129
Socket (6 prong)	27-6086
Socket (7 prong)	27-6087
Spring (drive cord)	28-8751
Speaker	36-1451
Tuning Shaft and Brkt. Assy.	31-2324
Turntable	35-2038
Washer (top rubber, motor mtg.)	27-4318
Washer (bottom rubber, motor mtg.)	27-4307
Washer (metal, coupling, turntable shaft)	315-1003